European Journal of Sport Science, 2018
Vol. 18, No. 6, 787–795, https://doi.org/10.1080/17461391.2018.1453869

ORIGINAL ARTICLE

The transfer of strength and power into the stroke biomechanics of young swimmers over a 34-week period

JORGE E. MORAIS[1,2], ANTÓNIO J. SILVA[2,3], NUNO D. GARRIDO[2,3], DANIEL A. MARINHO[1,2], & TIAGO M. BARBOSA[2,4,5]

[1]*Department of Sport Sciences, University of Beira Interior, Covilhã, Portugal;* [2]*Research Centre in Sports, Health and Human Development, University of Trás-os-Montes and Alto Douro, Vila Real, Portugal;* [3]*Department of Sport Sciences, Exercise and Health, University of Trás-os-Montes and Alto Douro, Vila Real, Portugal;* [4]*Department of Sport Sciences, Polytechnic Institute of Bragança, Bragança, Portugal &* [5]*National Institute of Education, Nanyang Technological University, Singapore, Singapore*

Abstract
The purpose of this study was to learn the interplay between dry-land strength and conditioning, and stroke biomechanics in young swimmers, during a 34-week training programme. Twenty-seven swimmers (overall: 13.33 ± 0.85 years old; 11 boys: 13.5 ± 0.75 years old; 16 girls: 13.2 ± 0.92 years old) competing at regional- and national-level competitions were evaluated. The swimmers were submitted to a specific in-water and dry-land strength training over 34 weeks (and evaluated at three time points: pre-, mid-, and post-test; M1, M2, and M3, respectively). The 100-m freestyle performance was chosen as the main outcome (i.e. dependent variable). The arm span (AS; anthropometrics), throwing velocity (TV; strength), stroke length (SL), and stroke frequency (SF; kinematics) were selected as independent variables. There was a performance enhancement over time (M1 vs. M3: 68.72 ± 5.57 s, 66.23 ± 5.23 s; $\Delta = -3.77\%$; 95% CI: −3.98;−3.56) and an overall improvement of the remaining variables. At M1 and M2, all links between variables presented significant effects ($p < .001$), except the TV–SL and the TV–SF path. At M3, all links between variables presented significant effects ($p \leq .05$). Between M1 and M3, the direct effect of the TV to the stroke biomechanics parameters (SL and SF) increased. The model predicted 89%, 88%, and 92% of the performance at M1, M2, and M3, respectively, with a reasonable adjustment (i.e. goodness-of-fit M1: $\chi^2/\text{df} = 3.82$; M2: $\chi^2/\text{df} = 3.08$; M3: $\chi^2/\text{df} = 4.94$). These findings show that strength and conditioning parameters have a direct effect on the stroke biomechanics, and the latter one on the swimming performance.

Keywords: *Training, performance, biomechanics*

Highlights
- Anthropometrics (AS) presented a positive direct effect to the swimmers' strength;
- Upper-limbs strength (TV) presented a direct effect to the swimmers' stroke biomechanics;
- Strength programmes may help young swimmers increasing their stroke biomechanics (SL and SF);
- Coaches should include proper strength and conditioning programmes in their training periodization, as they enhance young swimmers' stroke biomechanics, and consequently their performance.

Introduction

Several studies pointed out that an effective way to understand how an athlete may become an elite sportsman is: (i) throughout the identification of the main performance determinants and (ii) establish a relationship between those determinants and the training programme designed (Vescovi, Rupf, Brown, & Marques, 2011). In competitive swimming, this is a phenomenon based on the interaction of several domains, determining the performance delivered (Barbosa et al., 2010a). In youth swimming, biomechanics plays a key role (Figueiredo, Silva, Sampaio, Vilas-Boas, & Fernandes, 2016; Morais, Silva, Marinho, Seifert, & Barbosa, 2015) and is strongly related to the training programmes designed and implemented

Correspondence: Jorge E. Morais, Department of Sport Sciences, University of Beira Interior, Convento de Sto. António, 6201-001 Covilhã, Portugal. Email: morais.jorgestrela@gmail.com

© 2018 European College of Sport Science

(Morais, Marques, Marinho, Silva, & Barbosa, 2014).

Stroke biomechanics (i.e. stroke length [SL] and stroke frequency [SF]) showed a meaningful contribution (direct or mediator effect) to performance (Morais et al., 2014; Silva et al., 2013). Hence, stroke biomechanics has an impact on the performance, especially in sprinting events (Girold, Maurin, Dugué, Chatard, & Millet, 2007). It is suggested that the in-water force production determines the overall stroke biomechanics (Dominguez-Castells & Arellano, 2012). Therefore, one might consider that an increase in the overall strength and power might have a positive effect on the stroke biomechanics, and therefore on the performance. Youth athletes should engage in dry-land strength and conditioning (S&C) programmes. Several benefits are pointed out to these programmes, for instance: increases in muscular strength and endurance, increases in lean body mass, increases in flexibility, and lower odds of musculoskeletal injuries (Batalha et al., 2015; Dahab & McCambridge, 2009). Therefore, dry-land S&C programmes are advised to young swimmers and be part of their developmental training programme. Indeed, a study conducted by Morouço et al. (2011) showed a moderate-to-high association between dry-land and in-water parameters. This suggests that developing strength on land led to an enhancement of in-water parameters. However, little is known about the interplay between dry-land S&C training and its effect on the swimmers' stroke biomechanics. Some studies showed that dry-land strength and power might have a direct and/or mediate role on the swimmers' performance (Garrido et al., 2010; Girold et al., 2007; Strzala & Tyka, 2009). For instance, Strzala and Tyka (2009) noted that the maximal and average power of the upper limbs was strongly correlated to swimming velocity in young sprinters (i.e. 100-m events). However, the mechanisms by which dry-land S&C affects the stroke biomechanics and the performance in young swimmers are not clear.

The vast majority of the body of knowledge in sport sciences is encompassed by exploratory research employing "classical" statistical procedures. Regardless of being a bivariate or multivariate analysis, such research designs and statistical procedures only enable to learn the magnitude of variation and association/correlation between variables. Moreover, there is evidence about the performance determinants not being at the same level. Some variables/parameters may be more determinant than others, having different partial contributions to the performance. One way to learn about how one or more parameters may affect other is carrying out confirmatory research and selecting structural equation modelling (SEM). This SEM is a mathematical construct to test and estimate causal relationships. It is used as a combination of statistical data and qualitative causal assumptions set by the researcher. The analysis includes checking if the assumptions are matched (i.e. confirmed) or not by empirical data (Crowley & Fan, 1997). This modelling procedure enables not only to learn what are the variables that determine a given main outcome but also the interplay among them and the partial contribution of each one. Therefore, SEM or similar mathematical models should be advised to test mechanistic models and responses (also known as deterministic models). This statistical procedure was used a couple of times in cross-sectional (Barbosa et al., 2010b; Morais et al., 2016) and longitudinal (Morais et al., 2014) studies assessing young swimmers. However, the latter one is based on the variance of the performance (i.e. latent growth curve modelling) and assessing the direct effect of a set of variables directly to the performance (i.e. without assessing intermediate effects) (Morais et al., 2014). As far as we understand, the application of a given theoretical model in different evaluation moments has never been carried out before in swimming or in any other sport. This novel approach might allow us to learn if there are any differences between the linked variables over time (i.e. in different moments of the programme). One of the major insights about SEM is to show how much a given variable contributes to the other. Contrarily to randomized control trials, this statistical procedure allows for understanding the transfer mechanisms between parameters (Morais et al., 2016). There is not a solid body of knowledge about how the two major stroke biomechanics' parameters (SL and SF) contribute to the swimming performance. Several studies highlight their association/correlation (e.g. Figueiredo et al., 2016; Jürimäe et al., 2007; Lätt et al., 2009), but there is no evidence on such transfer mechanisms. In this particular case, how strength parameters influence the stroke biomechanics, and the former one the sprinting performance. Indeed, the literature lacks of information about how dry-land training contributes/affects young swimmers' performance. This knowledge might be of extreme importance to coaches and athletes in order to better periodate their training programmes (e.g. reducing/replace their extreme in-water workloads by an S&C programme).

The purpose of this study was to learn the interplay between dry-land S&C, stroke biomechanics, and swimming performance during a 34-week training programme. It was hypothesized that the training programme designed would have a positive impact on the contribution of dry-land S&C to the stroke biomechanics, and the last ones to the

15367290, 2018, 6, Downloaded from https://onlinelibrary.wiley.com/doi/10.1080/17461391.2018.1453869 by Czech Technical University in Prague, Wiley Online Library on [02/03/2026]. See the Terms and Conditions (https://onlinelibrary.wiley.com/terms-and-conditions) on Wiley Online Library for rules of use; OA articles are governed by the applicable Creative Commons License

performance, between the first, and the last evaluation moment.

Methods

Participants

Twenty-seven swimmers (overall: 13.3 ± 0.85 years old, 52.65 ± 7.42 kg of body mass, 162.11 ± 7.63 cm of height; 11 boys: 13.5 ± 0.75 years old, 54.12 ± 7.81 kg of body mass, 165.22 ± 8.45 cm of height; 16 girls: 13.2 ± 0.92 years old, 51.64 ± 7.22 kg of body mass, 159.96 ± 6.42 cm of height, at baseline) competing on a regular basis at regional- and national-level competitions were recruited. The sample included age-group national record holders, and other swimmers under a national talent-identification scheme. At the baseline, the swimmers had 3.67 ± 0.73 years of experience.

Coaches, and/or parents, and also the swimmers gave their consent/assent for the participation in this study. All procedures were in accordance with the Helsinki Declaration regarding Human research. The University Ethic Committee also approved the study design.

Training programme

The swimmers were under evaluation in three moments over a 34-week period (longitudinal research). The in-water training programme included 7.35 ± 1.17 training sessions per week during the 34-week testing. All three evaluation moments happened in the end of one macro-cycle (i.e. near major competition of the competitive season – peak performance: (i) December; (ii) March; and (iii) July). Details about the in-water training are depicted in Table I. Dry-land S&C sessions were held three times per week. The aim was to work out the S&C of the core, upper, and lower limbs. Strength training in youth athletes (as young swimmers) should be based in resistance training and not in maximum force production (Dahab & McCambridge, 2009; Faigenbaum & Myer, 2010). During the first stage (20 weeks; October–March), the swimmers performed 6 stations (20 s per station, 2 sets each drill) of callisthenic drills: sit-ups, push-ups, squats, vertical jumps, burpees, and mountain climbers. In the second stage (14 weeks; April–July), the drills increased to 30 s per station (2 sets each drill) and two more stations were added: tricep push-ups and elastic bands exercises (upper limbs). This training programme was designed based on the state of the art about young swimmers dry-land S&C (Amaro, Marinho, Marques, Batalha, & Morouço, 2017). The programme was conducted by a certified S&C coach.

Theoretical model

The theoretical model (Figure 1(A)) was designed in tandem to the state of the art on exploratory research in competitive swimming. Anthropometrics is strongly related to stroke biomechanics (SL and SF) (Barbosa et al., 2010b; Figueiredo et al., 2016). Strength and power is related to swim performance (Garrido et al., 2010; Girold et al., 2007). It is well known that stroke biomechanics also play a major role in swimming performance (Morais et al., 2016; Tsalis et al., 2012). Hence, the model tests a cascade of events where anthropometrics may have a positive and direct effect on the strength parameter (S&C). This last one (S&C parameter) plays a role on the stroke biomechanics, and the latter one on the performance. An SEM construct should be interpreted based on the following assumptions: (i) the variables/parameters included and (ii) the links/pathways established between variables/parameters (represented by arrows in the model). The links/pathways connecting two variables/parameters suggest that one variable determines the other, i.e. the variable/parameter in the arrow's base is the determining one, and the variable/parameter in the arrow's top is the one being predicted; (iii) beta values in each link/pathway (represent the contribution of the determination capacity of one variable to the other); and (iv) residual errors (value inside the circle) and/or determination coefficient (value next to the square representing the parameter, that suggests the determination capacity of each level of the model in the following level) (Morais et al., 2012). This statistical procedure approach is based on the links between variables (i.e. the capacity of one or more dependent variables can predict an independent one). In this model, the main outcome is the swimming performance (independent variable), and the remaining variables are the dependent ones (arm span – anthropometrics; throwing velocity (TV) – strength; SL and SF – stroke biomechanics).

Anthropometrics data collection

The arm span (AS) is a determinant factor strongly related to performance in young swimmers (Jürimäe et al., 2007; Nasirzade et al., 2015). Longer AS is related to better performances (Lätt et al., 2009; Morais et al., 2015). For the AS assessment, swimmers were wearing a swimsuit and cap, standing in the upright orthostatic position having the upper limbs and fingers fully extended in lateral abduction at a 90°

15367290, 2018, 6, Downloaded from https://onlinelibrary.wiley.com/doi/10.1080/17461391.2018.1453869 by Czech Technical University in Prague, Wiley Online Library on [02/03/2026]. See the Terms and Conditions (https://onlinelibrary.wiley.com/terms-and-conditions) on Wiley Online Library for rules of use; OA articles are governed by the applicable Creative Commons License

Table I. Mileage of the in-water training programme (mean km per week)

Training programme										
Training zone	October	November	December	January	February	March	April	May	June	July
A0 (km)	8.05	10.34	11.00	15.48	12.73	9.35	8.99	14.24	12.15	7.00
A1 (km)	13.60	13.80	13.70	13.00	12.30	12.80	10.30	12.40	11.90	9.00
A2 (km)	7.00	10.80	7.90	11.50	9.50	7.00	5.70	10.20	9.80	8.25
A3 (km)	3.50	6.40	5.30	6.80	7.00	4.80	4.30	8.00	8.30	5.50
Total (km)	32.15	41.34	37.90	46.78	41.53	33.95	29.29	44.84	42.15	29.75

Note: Training zone: A0 – warm-up and recovery pace; A1 – slow pace; A2 – moderate pace – aerobic capacity; A3 – intense pace – aerobic power (Maglischo, 2003).

angle with the trunk. The distance between the third fingertip (in cm) of each hand was measured with a flexible anthropometric tape (RossCraft, Canada) (intraclass correlation coefficient: ICC = 0.98).

Strength and conditioning (S&C) data collection

The TV was chosen as strength parameter. The TV is highly related to an overall upper-limbs strength (Van Den Tillaar & Marques, 2011). A Doppler radar gun (Stalker ATS II, TX, USA), with $a \pm 0.04$ m s^{-1} accuracy within a field of 12° from the device, was used to measure the TV. The radar gun was set 1 m behind the swimmer at the projection's height. Before the data collection, the swimmers performed a warm-up session based on the following procedures. They were briefed to maintain both feet parallel and shoulder width while throwing a medicine ball (1 kg of mass and 0.72 m of circumference). In a sitting position, they begin by holding the ball in front of them (at the sternum level) with both hands, afterwards were instructed to throw the ball as far, and as fast as possible (Van Den Tillaar & Marques, 2011). A very high ICC was observed (ICC = 0.94).

Kinematics data collection

SL and SF were selected to monitor the stroke biomechanics. Before the data collection, the swimmers performed a warm-up session. Each swimmer performed three all-out bouts of 25 m in freestyle swimming with a push-off start. The swimmers had a 30-minute rest between trials ensuring a full recovery. The average value of the three trials was used for further analysis.

A speedometer cable (Swim speedometer, Swimsportec, Hildesheim, Germany) was attached to the swimmer's hip. A 12-bit resolution acquisition card (USB-6008, National Instruments, Austin, TX, USA) was used to transfer data ($f = 50$ Hz) from the speedometer to a software interface in LabVIEW® (v.2009) (Barbosa et al., 2015). Data was exported to a signal processing software (AcqKnowledge v.3.5, Biopac Systems, Santa Barbara, CA, USA) and filtered with a 5 Hz cut-off low-pass fourth-order Butterworth filter. The swimming velocity was computed in the middle 15 m as $v = d\,t^{-1}$. Afterwards, the SF (in cycles·min^{-1}, and next converted to Hz) was measured with a stroke counter (base 3) by two expert evaluators (ICC = 0.97). The SL was calculated as SL = v·SF^{-1} (Craig & Pendergast, 1979).

Performance data collection

The 100-m freestyle (PERF) event at regional or national short course meter competition (i.e. 25-m length) was selected as the performance outcome. The time lag between the official race and remaining data collection took no longer than 15 days.

Data analysis

Normality and homoscedasticity assumptions were analysed with the Shapiro–Wilk and Levene tests, respectively. The mean, 1 standard deviation, minimum, maximum, and 95% confidence interval (CI) were calculated as descriptive statistics. A one-way analysis of variance repeated measures was used to assess the data variation between moments, and the Bonferroni test to assess the pairwise between moments ($p < .05$). Total eta square (η^2) was selected as effect size index and interpreted as: (i) without effect if $0 < \eta^2 \leq 0.04$; (ii) minimum if $0.04 < \eta^2 \leq 0.25$; (iii) moderate if $0.25 < \eta^2 < 0.64$; and (iv) strong if $\eta^2 > 0.64$ (Ferguson, 2009).

Path-flow analysis, a sub-type of SEM, was used to test the theoretical model (Barbosa et al., 2010b; Morais et al., 2016). Each link is joined by a standardized regression coefficient (beta value) that noted the contribution of one variable to the other. The significance of the standardized regression coefficients is assessed by Student's t-test ($p \leq .05$). The residual errors, and the determination coefficients, expressing

15367290, 2018, 6, Downloaded from https://onlinelibrary.wiley.com/doi/10.1080/17461391.2018.1453869 by Czech Technical University in Prague, Wiley Online Library on [02/03/2026]. See the Terms and Conditions (https://onlinelibrary.wiley.com/terms-and-conditions) on Wiley Online Library for rules of use; OA articles are governed by the applicable Creative Commons License

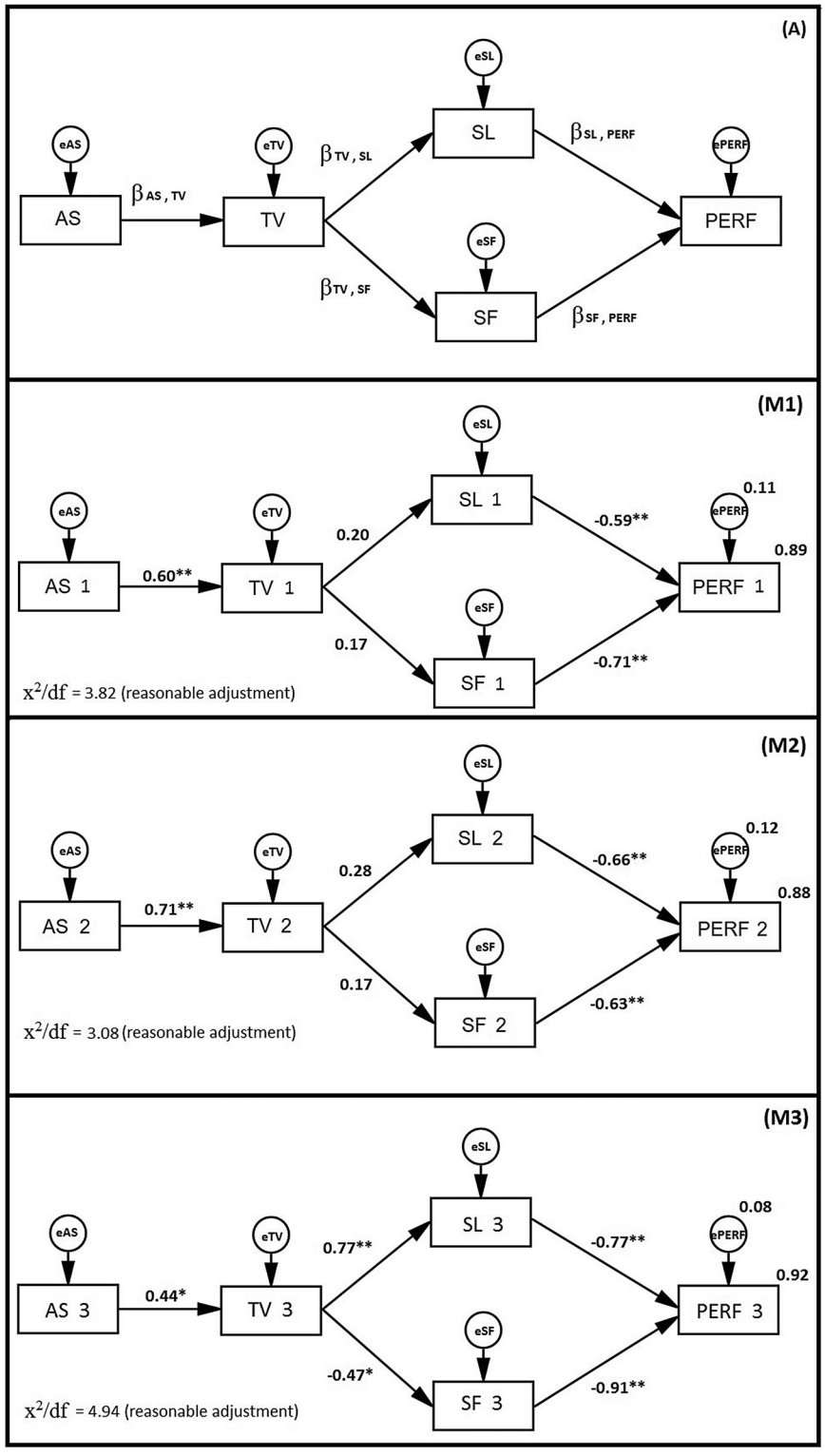

Figure 1. (A) Theoretical model for the 100-m swimming performance and the effects of the remaining parameters selected. M1 – Confirmatory model for the first evaluation moment. M2 – Confirmatory model for the second evaluation moment. M3 – Confirmatory model for the third evaluation moment. AS: arm span; TV: throwing velocity; SL: stroke length; SF: stroke frequency; PERF: 100-m swimming performance. (B) x_i, y_i: beta value for regression model between variables; e_{xi}: disturbance term for a given variable (residual error); $x_i \rightarrow y_i$: variable y_i depends from variable x_i; $^{**}p < .001$; $^{*}p < .05$.

15367290, 2018, 6, Downloaded from https://onlinelibrary.wiley.com/doi/10.1080/17461391.2018.1453869 by Czech Technical University in Prague, Wiley Online Library on [02/03/2026]. See the Terms and Conditions (https://onlinelibrary.wiley.com/terms-and-conditions) on Wiley Online Library for rules of use; OA articles are governed by the applicable Creative Commons License

the variable predictive error and the variable predictive value, respectively, were also computed. The quality of the model's goodness-of-fit was controlled by computing the ratio Chi-square/degrees of freedom (χ^2/df). The ratio Chi-square/degrees of freedom was considered qualitatively having a: poor adjustment if $\chi^2/\text{df} > 5$; reasonable adjustment $5 \geq \chi^2/\text{df} > 2$; good adjustment $2 \geq \chi^2/\text{df} > 1$; very good adjustment $\chi^2/\text{df} \sim 1$ (Wheaton, 1987).

Results

There was a performance enhancement over time with a moderate effect size (M1 vs. M3: 68.72 ± 5.57 s, 66.23 ± 5.23 s; Δ = −3.77%; 95% CI: −3.98; −3.56; $p < .001$; $\eta^2 = 0.56$). All other variables improved significantly with trivial-moderate effect sizes, except the SL (M1 vs. M3: 1.68 ± 0.11 m, 1.70 ± 0.12 m; Δ = 1.18%; 95% CI: 0.85;1.67; $p = .83$; $\eta^2 = 0.01$) (Table II). The TV was the parameter with the largest variation (M1 vs. M3: 6.58 ± 0.96 m s^{-1}, 7.20 ± 0.75 m s^{-1}; Δ = 8.69%; 95% CI: 7.87;9.50; $p < .001$; $\eta^2 = 0.31$) (Table II).

Figure 1 depicts the confirmatory model computed in the three evaluation moments (M1, M2, and M3). Overall, the links were significant between the variables included in the model. In the first model (Figure 1, M1), the SF-PERF was the link with the highest direct effect ($\beta = -0.71$, $p < .001$; by each 1 Hz increase, performance improved 0.71 s). In the second model (Figure 1, M2), it was the AS-TV ($\beta = 0.71$, $p < .001$; by each 1-cm increase, TV increased 0.71 m s^{-1}). And in the third model (Figure 1, M3), it was the SF-PERF link ($\beta = -0.91$, $p < .001$; by each 1 Hz increase, the performance improved 0.91 s). The TV (strength and power parameter) showed a direct effect on the increase in the stroke biomechanics in all evaluation moments (M1 vs. M2, M2 vs. M3, M1 vs. M3). The TV–SL path increased from $\beta = 0.20$ ($p > .05$) at M1 to $\beta = 0.77$ ($p < .001$) at M3. The TV–SF path from $\beta = 0.17$ ($p > .05$) at M1 to $\beta = -0.47$ ($p \leq .05$) at M3. Overall, the model predicted 89% (0.89 in Figure 1, M1), 88% (0.88 in Figure 1, M2), and 92% (0.92 in Figure 1, M3) of the performance at M1, M2, and M3, respectively. The model's goodness-of-fit had reasonable adjustments in all moments (M1: $\chi^2/\text{df} = 3.82$ reasonable adjustments; M2: $\chi^2/\text{df} = 3.08$ reasonable adjustment; M3: $\chi^2/\text{df} = 4.94$ reasonable adjustments).

Discussion

The main aim of this study was to assess the interplay among anthropometrics, S&C, stroke biomechanics,

Table II. Descriptive statistics of the performance and all independent variables in each evaluation moment (including the effect size and 95% CI)

	M1			M2			M3			M1 vs. M2	M2 vs. M3	M1 vs. M3		
	Mean ± 1 SD	Max	Min	Mean ± 1 SD	Max	Min	Mean ± 1 SD	Max	Min	Δ [95% CI]	Δ [95% CI]	Δ [95% CI]	F	η^2
AS* (cm)	166.0 ± 7.88	181.5	152.0	167.3 ± 8.05	182.0	152.0	168.3 ± 8.10	182.5	153.0	0.77 [0.70; 0.84]	0.61 [0.56; 0.66]	1.39 [1.30; 1.48]	25.63 ($p < .001$)	0.49
TV# (m·s^{-1})	6.58 ± 0.96	7.95	4.20	7.00 ± 0.82	8.95	5.45	7.20 ± 0.75	9.45	6.30	5.73 [4.99; 6.47]	3.03 [2.49; 3.57]	8.69 [7.87; 9.50]	11.85 ($p < .001$)	0.31
SF (Hz)	0.82 ± 0.07	0.97	0.69	0.84 ± 0.06	0.94	0.72	0.86 ± 0.08	1.10	0.73	2.30 [1.90; 2.70]	0.61 [0.20; 1.03]	2.96 [2.45; 3.47]	3.43 ($p = .04$)	0.12
SL (m)	1.69 ± 0.11	2.00	1.47	1.68 ± 0.11	2.01	1.47	1.70 ± 0.12	2.03	1.41	−0.47 [−0.87; −0.07]	0.48 [0.09; 0.88]	1.18 [0.85; 1.67]	0.18 ($p = .83$)	0.01
Vel (m s^{-1})	1.39 ± 0.10	1.63	1.20	1.41 ± 0.09	1.67	1.26	1.44 ± 0.09	1.71	1.27	2.01 [0.77; 3.25]	1.41 [0.43; 2.39]	3.43 [2.25; 4.61]	17.54 ($p < .001$)	0.40
PERF† (s)	68.72 ± 5.57	80.36	58.26	66.76 ± 4.92	74.39	55.99	66.23 ± 5.23	75.36	55.82	−2.92 [−3.12; −2.72]	−0.83 [−0.94; −0.72]	−3.77 [−3.98; −3.56]	33.05 ($p < .001$)	0.56

Notes: AS – arm span; TV – throw velocity; SF – stroke frequency; SL – stroke length; Vel – swimming velocity; PERF – 100-m performance. *Significant differences ($p \leq .001$) between all moments; #significant differences ($p \leq .01$) between M1 vs. M2 and M1 vs. M3, but no-significant between M2 vs. M3; †significant differences ($p < .001$) between M1 vs. M2 and M1 vs. M3 and between M2 vs. M3 ($p < .05$).

15367290, 2018, 6, Downloaded from https://onlinelibrary.wiley.com/doi/10.1080/17461391.2018.1453869 by Czech Technical University in Prague, Wiley Online Library on [02/03/2026]. See the Terms and Conditions (https://onlinelibrary.wiley.com/terms-and-conditions) on Wiley Online Library for rules of use; OA articles are governed by the applicable Creative Commons License

and performance, over a 34-week training programme for young talented swimmers. Main findings were that stroke biomechanics played a mediator role between S&C and young swimmers' performance. There is a direct effect between the S&C parameters and the stroke biomechanics, as well as between the swimming biomechanics and performance. The model explained the young swimmers' performance by about 90% in the three evaluation moments held.

The set of parameters selected as determinant factors are reported very often in the literature which show strong associations to young swimmers' performance (Figueiredo et al., 2016; Silva et al., 2013). Our data are in accordance with such reports. During the 34 weeks, all determinant factors are improved and the performance are enhanced significantly (M1: 68.72 ± 5.57 s, M3: 66.23 ± 5.23 s; $\Delta = -3.77\%$; 95% CI: −3.98;−3.56; $p < .001$; $\eta^2 = 0.56$).

The AS showed a constant increase between moments (M1 vs. M2: $\Delta = 0.77\%$; M2 vs. M3: $\Delta = 0.61$; M1 vs. M3: $\Delta = 1.39\%$). The TV had the same trend, increasing by 8.69% between M1 and M3 (M1 vs. M2: $\Delta = 5.73\%$; M2 vs. M3: $\Delta = 3.03\%$). At M1, an AS increase, imposed an increase on the TV ($\beta = 0.60$, $p < .001$). The same was verified at M2 ($\beta = 0.71$, $p < .001$). However, at M3, this value decreased ($\beta = 0.44$, $p \leq .05$). The AS had a positive effect on the swimmer upper-limbs' strength. Between M1 and M2, it denoted the highest increase ($\Delta = 0.77\%$; $p \leq .001$), and also its highest positive and significant effect on the TV (this one also with the highest increase between M1 and M2: $\Delta = 5.73\%$; $p \leq .01$). But it seems that at some point, the anthropometrics increase reduced its influence on strength parameters. Other factors might play an important role in the strength enhancement (like strength programmes), besides the anthropometrics. For example, Cochrane et al. (2015) showed that an increase in the forearm flexion and extension strength improved the swimming performance. Conversely, other researchers noted that the fastest swimmers have larger muscle volumes (e.g. triceps brachii) (Nasirzade et al., 2014).

The SL and the SF increased between the first and the last evaluation moment (SL: 1.68 ± 0.11 m vs. 1.70 ± 0.12 m, $\Delta = 1.18\%$; SF: 0.82 ± 0.07 Hz vs. 0.86 ± 0.08 Hz, $\Delta = 2.96\%$). The direct effect of the TV–SL path was $\beta = 0.20$ ($p > .05$) at M1, $\beta = 0.28$ ($p > .05$) at M2, and $\beta = 0.77$ ($p < .001$) at M3. Despite an increase of the contribution from the TV–SF path between M1 and M3 (M1: $\beta = 0.17$, $p > .05$; M3: $\beta = -0.47$, $p \leq .05$), the direct effect switched from a positive (M1 and M2) to a negative relationship (M3). Interestingly, Sadowski, Mastalerz, Gromisz, and Niznikowski (2012) reported the same phenomenon. In their research, a group of swimmers were under an S&C programme, and their SF decreased between evaluation moments (−4.30%) (Sadowski et al., 2012). This may suggest that the S&C programmes paired with the in-water training aided the SL. Despite the main aim of this sport is to swim faster, technical training of young swimmers should not neglect the SL enhancement. Adult/elite swimmers are able to keep SL rather long, regardless of the swim pace (e.g. Arellano, Brown, Cappaert, & Nelson, 1994; Craig, Skehan, Pawelczyk, & Boomer, 1985). Whenever they want to increase the pace, they do it increasing the SF. This SL–SR relationship is used because at a given pace, a higher SL of SR leads a lower energy cost of swimming (Barbosa, Keskinen, Fernandes, & Vilas-Boas, 2008). However, in young swimmers, because the stroke biomechanics is not yet fully consolidated, they might be rushing their catch-up phase and producing inadequate force during their underwater phase (downsweep, insweep, and upsweep). This alternative motor behaviour leads to an increase in the SF. So, young swimmers are more prone to increase the swim pace by increasing the SF. However, the consequence is a higher energy cost of swimming (Barbosa et al., 2008). Due to this, young swimmers should firstly be advised to maximize their SL, and only afterwards increase the SF (as it happens with their adult/elite counterparts) (Morais, Silva, Marinho, Lopes, & Barbosa, 2017). In this sense, our data show that the dry-land S&C programme helped the swimmers to build-up upper limbs strength that had a meaningful contribution to the stroke biomechanics (especially the SL). Studies described the positive contribution of dry-land S&C programmes to young swimmers' performance (Garrido et al., 2010; Girold et al., 2007). However, such studies only show that there is a positive relationship between the S&C and the performance. They do not explain how that relationship is established, especially when other parameters (like stroke biomechanics) may play an intermediate role in the performance modelling and enhancement (Barbosa et al., 2010b). SEM based on the path-flow analysis is a simple way to learn about the interplay between parameters. Instead of analysing the direct relationship between the selected parameters and the performance, it allows one to assess and verify how other parameters interplay in intermediate stages (Barbosa et al., 2010b; Morais et al., 2012). In this model allows to understand: how anthropometrics (AS) affect the upper limbs strength (TV), the latter the stroke mechanics (SF and SL), and this the performance. At least for young swimmers, this dry-land S&C programme (based on callisthenic drills) proved to be a successful complement to the

15367290, 2018, 6, Downloaded from https://onlinelibrary.wiley.com/doi/10.1080/17461391.2018.1453869 by Czech Technical University in Prague, Wiley Online Library on [02/03/2026]. See the Terms and Conditions (https://onlinelibrary.wiley.com/terms-and-conditions) on Wiley Online Library for rules of use; OA articles are governed by the applicable Creative Commons License

in-water training, having a positive and significant effect to both stroke biomechanics indicators (i.e. SL and SF).

Overall, the performance increased significantly between evaluation moments, especially between M1 and M3 (68.72 ± 5.57 s vs. 66.23 ± 5.23 s; $\Delta = -3.77\%$; $p < .001$). The two biomechanical parameters selected (i.e. SL and SF) had positive and significant direct effects on the performance in all three evaluation moments (i.e. an increase in the SL and/or the SF means less time to cover the distance). In both M1 and M3, the SF presented the highest direct effect on performance (M1: $\beta = -0.71, p < .001$; M2: $\beta = -0.91, p < .001$) in comparison to the SL (M1: $\beta = -0.59$, $p < .001$; M2: $\beta = -0.77$, $p < .001$). One might argue that sprinters, especially for adult/elite sprinters, a high SF may lead to a faster swim. This happens because adult/elite swimmers present a highly consolidated stroke biomechanics where the force production is maximized. However, young swimmers are still acquiring and consolidating mechanical and motor control patterns due to the body growth (Morais et al., 2017). The swimmers enhanced their performance by an SF increase that may impair the efficiency. Therefore, they should first be instructed to increase their SL, which may have a significant effect on enhancing the performance in a more efficient fashion way, especially when the increase in their upper body strength allowed them to increase their SL (as we showed before). Moreover, studies reported that during a mid-long-term (a competitive season) young swimmers' SL may present significant decreases (followed by an increase) (e.g. Morais et al., 2015; Morais et al., 2017). This S&C programme proved to be of major importance, since it allowed the swimmers to only slightly decrease their SL, instead of presenting a significant decrease between intermediate moments as verified in other studies (e.g. Morais et al., 2015; Morais et al., 2017).

Data suggest that dry-land S&C programmes might be an effective way to complement the in-water training. There is a performance enhancement, which is due to an improvement of the stroke biomechanics. The SF showed the highest change over time ($\Delta = 2.96\%$, $p = .04$, $\eta^2 = 0.12$). However, coaches should deliver insightful cues on the swimmers' technique. Their aim should be on enhancing the role of SL on the swim stroke. Nonetheless, a higher SF was related to the fastest swim. The main limitations are: (i) this model is only suitable for sprinting events of young swimmers; (ii) the selection of the TV as a strength parameter might be not enough to ensure a holistic understanding of the S&C programme's impact; (iii) the inclusion of a variable assessing the swim efficiency would help confirming if a higher direct effect by the SF is related to a lower swimming efficiency; and (iv) the biomechanical parameters were assessed during a 25-m trial and not in the 100-m performance. Nonetheless, it was reported that the correlation between the 25-m trial and the 100-m performance was very high ($r = 0.71$, $p < .001$) (Morais et al., 2017), and in our present study was $r = 0.88$ ($p < .001$).

Conclusion

As a conclusion, this model that encompasses anthropometrics, S&C, and stroke biomechanics can explain the swimming performance by 89%, 88%, and 92%, respectively, before, during and after a 34-week programme. Anthropometrics had an effect on the S&C, this one on the stroke biomechanics that ultimately affected the swimming performance.

The key finding of this study is that young swimmers' S&C programmes are meaningfully helpful in enhancing their performance. These S&C programmes help to improve the swimmers' stroke biomechanics (i.e. SF and SL that are determined by force production) throughout an increase in strength parameters. Stroke biomechanics (SF and SL) presented a meaningful and significant effect on the performance. In this sense, coaches are advised to put the focus on young swimmers' technical training to ensure a proper development of the SF and SL (where S&C programmes play an important role).

Acknowledgments

We would like to thank the support of the University of Beira Interior and Santander Universities (Bolsa BIPD/ICI-FCSH-Santander Universidades-UBI/2017).

Disclosure statement

No potential conflict of interest was reported by the authors.

References

Amaro, N. M., Marinho, D. A., Marques, M. C., Batalha, N. P., & Morouço, P. G. (2017). Effects of dry-land strength and conditioning programs in age group swimmers. *Journal of Strength and Conditioning Research*, *31*(9), 2447–2454.

Arellano, R., Brown, P., Cappaert, J., & Nelson, R. (1994). Analysis of 50, 100, and 200m freestyle swimmers at the 1992 Olympic games. *Journal of Applied Biomechanics*, *10*, 189–199.

Barbosa, T. M., Bragada, J. A., Reis, V. M., Marinho, D. A., Carvalho, C., & Silva, A. J. (2010a). Energetics and biomechanics as determining factors of swimming performance: Updating the state of the art. *Journal of Science and Medicine in Sport*, *13*(2), 262–269.

15367290, 2018, 6, Downloaded from https://onlinelibrary.wiley.com/doi/10.1080/17461391.2018.1453869 by Czech Technical University in Prague, Wiley Online Library on [02/03/2026]. See the Terms and Conditions (https://onlinelibrary.wiley.com/terms-and-conditions) on Wiley Online Library for rules of use; OA articles are governed by the applicable Creative Commons License

Barbosa, T. M., Costa, M. J., Marinho, D. A., Coelho, J., Moreira, M., & Silva, A. J. (2010b). Modeling the links between young swimmers' performance: Energetic and biomechanic profiles. *Pediatric Exercise Science*, *22*(3), 379–391.

Barbosa, T. M., Keskinen, K. L., Fernandes, R. J., & Vilas-Boas, J. P. (2008). The influence of stroke mechanics into energy cost of elite swimmers. *European Journal of Applied Physiology*, *103*, 139–149.

Barbosa, T. M., Morais, J. E., Marques, M. C., Silva, A. J., Marinho, D. A., & Kee, Y. H. (2015). Hydrodynamic profile of young swimmers: Changes over a competitive season. *Scandinavian Journal of Medicine and Science in Sports*, *25*(2), e184–e196.

Batalha, N., Raimundo, A., Tomas-Carus, P., Paulo, J., Simao, R., & Silva, A. J. (2015). Does a land-based compensatory strength-training pragramme influences the rotator cuff balance of young competitive swimmers? *European Journal of Sport Science*, *15*(8), 764–772.

Cochrane, K. C., Housh, T. J., Smith, C. M., Hill, E. C., Jenkins, N. D., Johnson, G. O., … Cramer, J. T. (2015). Relative contributions of strength, anthropometric, and body composition characteristics to estimated propulsive force in young male swimmers. *Journal of Strength and Conditioning Research*, *29*(6), 1473–1479.

Craig, A. B., & Pendergast, D. (1979). Relationships of stroke rate, distance per stroke and velocity in competitive swimming. *Medicine and Science in Sports*, *11*, 278–283.

Craig, A. B., Skehan, P. L., Pawelczyk, J. A., & Boomer, W. L. (1985). Velocity, stroke rate, and distance per stroke during elite swimming competition. *Medicine and Science in Sports Exercise*, *17*(6), 625–634.

Crowley, S. L., & Fan, X. (1997). Structural equation modeling: basic concepts and applications in personality assessment research. *Journal of Personality Assessment*, *68*(3), 508–531.

Dahab, K. S., & McCambridge, T. M. (2009). Strength training in children and adolescents. *Sports Health: A Multidisciplinary Approach*, *1*(3), 223–226.

Dominguez-Castells, R., & Arellano, R. (2012). Effect of different loads on stroke and coordination parameters during freestyle semi-tethered swimming. *Journal of Human Kinetics*, *32*, 33–41.

Faigenbaum, A. D., & Myer, G. D. (2010). Resistance training among young athletes: Safety, efficacy and injury prevention effects. *British Journal of Sports Medicine*, *44*(1), 56–63.

Ferguson, C. J. (2009). An effect size primer: A guide for clinicians and researchers. *Professional Psychology: Research and Practice*, *40*, 532–538.

Figueiredo, P., Silva, A., Sampaio, A., Vilas-Boas, J. P., & Fernandes, R. J. (2016). Front crawl sprint performance: A cluster analysis of biomechanics, energetics, coordinative, and anthropometric determinants in young swimmers. *Motor Control*, *20*(3), 209–221.

Garrido, N. D., Marinho, D. A., Barbosa, T. M., Costa, A. M., Silva, A. J., Pérez-Turpin, J. A., & Marques, M. C. (2010). Relationships between dry land strength, power variables and short sprint performance in young competitive swimmers. *Journal of Human Sport and Exercise*, *5*(2), 240–249.

Girold, S., Maurin, D., Dugué, B., Chatard, J. C., & Millet, G. (2007). Effects of dry-land vs. Resisted- and assisted-sprint exercises on swimming sprint performances. *Journal of Strength and Conditioning Research*, *21*, 599–605.

Jürimäe, J., Haljaste, K., Cicchella, A., Lätt, E., Purge, P., Leppik, A., & Jürimäe, T. (2007). Analysis of swimming performance from physical, physiological and biomechanical parameters in young swimmers. *Pediatric Exercise Science*, *19*, 70–81.

Lätt, E., Jürimäe, J., Haljaste, K., Cicchella, A., Purge, P., & Jurimae, T. (2009). Longitudinal development of physical and performance parameters during biological maturation of young male swimmers. *Perceptual and Motor Skills*, *108*, 297–307.

Maglischo, E. (2003). *Swimming fastest*. Champaign, IL: Human Kinetics.

Morais, J. E., Jesus, S., Lopes, V., Garriso, N. D., Silva, A. J., Marinho, D. A., & Barbosa, T. M. (2012). Linking selected kinematic, anthropometric and hydrodynamic variables to young swimmer performance. *Pediatric Exercise Science*, *24*(4), 649–664.

Morais, J. E., Marques, M. C., Marinho, D. A., Silva, A. J., & Barbosa, T. M. (2014). Longitudinal modeling in sports: Young swimmers' performance and biomechanics profile. *Human Movement Science*, *37*, 111–122.

Morais, J. E., Silva, A. J., Marinho, D. A., Lopes, V. P., & Barbosa, T. M. (2017). Determinant factors of long-term performance development in young swimmers. *International Journal of Sports Physiology and Performance*, *12*, 198–205.

Morais, J. E., Silva, A. J., Marinho, D. A., Marques, M. C., Batalha, N., & Barbosa, T. M. (2016). Modelling the relationship between biomechanics and performance of young sprinting swimmers. *European Journal of Sport Science*, *16*(6), 661–668.

Morais, J. E., Silva, A. J., Marinho, D. A., Seifert, L., & Barbosa, T. M. (2015). Cluster stability as a new method to assess changes in performance and its determinant factors over a season in young swimmers. *International Journal of Sports Physiology and Performance*, *10*, 261–268.

Morouço, P., Neiva, H., González-Badillo, J. J., Garrido, N. D., Marinho, D. A., & Marques, M. C. (2011). Associations between dry land strength and power measurements with swimming performance in elite athletes: A pilot study. *Journal of Human Kinetics, Special Issue*, *29A*, 105–112.

Nasirzade, A., Ehsanbakhsh, A., Ilbeygi, S., Sobhkhiz, A., Argavani, H., & Aliakbari, M. (2014). Relationship between sprint performance of front crawl swimming and muscle fascicle length in young swimmers. *Journal of Sports Science and Medicine*, *13*, 550–556.

Nasirzade, A., Sadeghi, H., Sobhkhiz, A., Mohammadian, K., Nikouei, A., Baghaiyan, M., & Fattahi, A. (2015). Multivariate analysis of 200-m front crawl swimming performance in young male swimmers. *Acta Bioengineering and Biomechanics*, *17*(3), 137–143.

Sadowski, J., Mastalerz, A., Gromisz, W., & Niznikowski, T. (2012). Effectiveness of the power dry-land training programmes in youth swimmers. *Journal of Human Kinetics*, *32*, 77–86.

Silva, A. F., Figueiredo, P., Seifert, L., Soares, S., Vilas-Boas, J. P., & Fernandes, R. J. (2013). Backstroke technical characterization of 11–13 year old swimmers. *Journal of Sports Science and Medicine*, *12*(4), 623–629.

Strzala, M., & Tyka, A. (2009). Physical endurance, somatic indices and swimming technique parameters as determinants of front crawl swimming speed at short distances in young swimmers. *Medicina Sportiva*, *13*(2), 99–107.

Tsalis, G., Toubekis, A. G., Michailidou, D., Gourgoulis, V., Douda, H., & Tokmakidis, S. P. (2012). Physiological responses and stroke-parameter changes during interval swimming in different age-group female swimmers. *Journal of Strength and Conditioning Research*, *26*, 3312–3319.

Van Den Tillaar, R., & Marques, M. C. (2011). A comparison of three training programs with the same workload on overhead throwing velocity with different weighted balls. *Journal of Strength and Conditioning Research*, *25*, 2316–2321.

Vescovi, J. D., Rupf, R., Brown, T. D., & Marques, M. C. (2011). Physical performance characteristics of high-level female soccer players 12–21 years of age. *Scandinavian Journal of Medicine and Science in Sports*, *21*(5), 670–678.

Wheaton, B. (1987). Assessement of fit in overidentified models with latent variables. *Sociological Methods & Research*, *16*, 118–154.

15367290, 2018, 6, Downloaded from https://onlinelibrary.wiley.com/doi/10.1080/17461391.2018.1453869 by Czech Technical University in Prague, Wiley Online Library on [02/03/2026]. See the Terms and Conditions (https://onlinelibrary.wiley.com/terms-and-conditions) on Wiley Online Library for rules of use; OA articles are governed by the applicable Creative Commons License